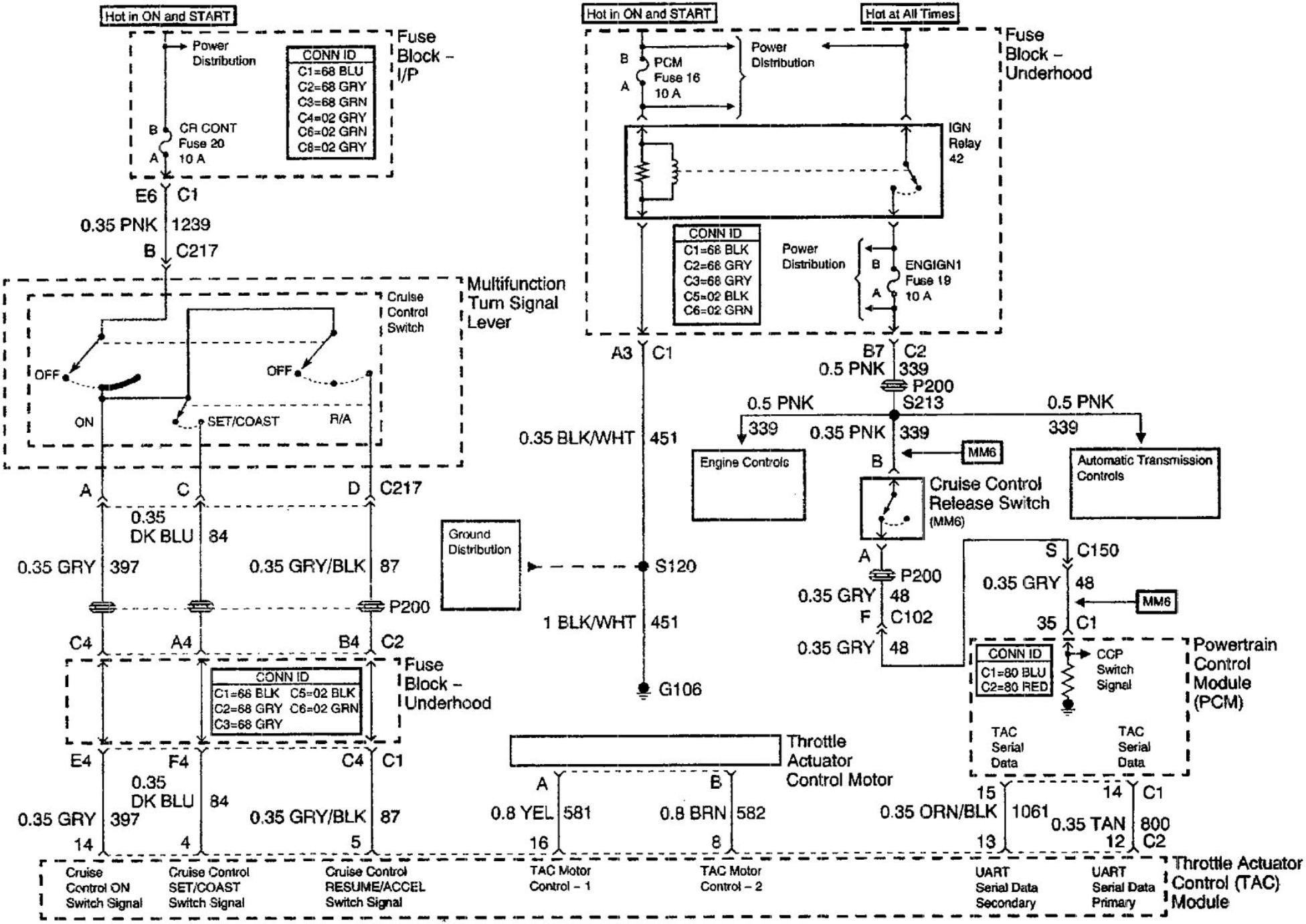
Hot in ON and START
Power Distribution
CONN ID
C1=68 BLU
C2=68 GRY
C3=68 GRN
C4=02 GRY
C6=02 GRN
C8=02 GRY
Fuse Block – I/P
B
CR CONT Fuse 20 10 A
A
E6
C1
0.35 PNK
1239
B
C217
Multifunction Turn Signal Lever
Cruise Control Switch
OFF
OFF
ON
SET/COAST
R/A
A
C
D
C217
0.35 DK BLU
84
0.35 GRY
397
0.35 GRY/BLK
87
P200
C4
A4
B4
C2
Fuse Block – Underhood
CONN ID
C1=68 BLK
C2=68 GRY
C3=68 GRY
C5=02 BLK
C6=02 GRN
E4
F4
C4
C1
0.35 DK BLU
84
0.35 GRY
397
0.35 GRY/BLK
87
14
4
5
Hot in ON and START
Hot at All Times
Fuse Block – Underhood
B
PCM Fuse 16 10 A
A
Power Distribution
IGN Relay 42
CONN ID
C1=68 BLK
C2=68 GRY
C3=68 GRY
C5=02 BLK
C6=02 GRN
Power Distribution
B
ENGIGN1 Fuse 19 10 A
A
A3
C1
B7
C2
0.5 PNK
339
P200
S213
0.5 PNK
339
0.5 PNK
339
0.35 BLK/WHT
451
0.35 PNK
339
Engine Controls
MM6
B
Automatic Transmission Controls
Cruise Control Release Switch (MM6)
Ground Distribution
S120
A
P200
0.35 GRY
48
F
C102
0.35 GRY
48
1 BLK/WHT
451
G106
S
C150
0.35 GRY
48
MM6
35
C1
CONN ID
C1=80 BLU
C2=80 RED
CCP Switch Signal
Powertrain Control Module (PCM)
TAC Serial Data
TAC Serial Data
Throttle Actuator Control Motor
A
B
0.8 YEL
581
0.8 BRN
582
16
8
15
14
C1
0.35 ORN/BLK
1061
0.35 TAN
800
13
12
C2
Cruise Control ON Switch Signal
Cruise Control SET/COAST Switch Signal
Cruise Control RESUME/ACCEL Switch Signal
TAC Motor Control – 1
TAC Motor Control – 2
UART Serial Data Secondary
UART Serial Data Primary
Throttle Actuator Control (TAC) Module

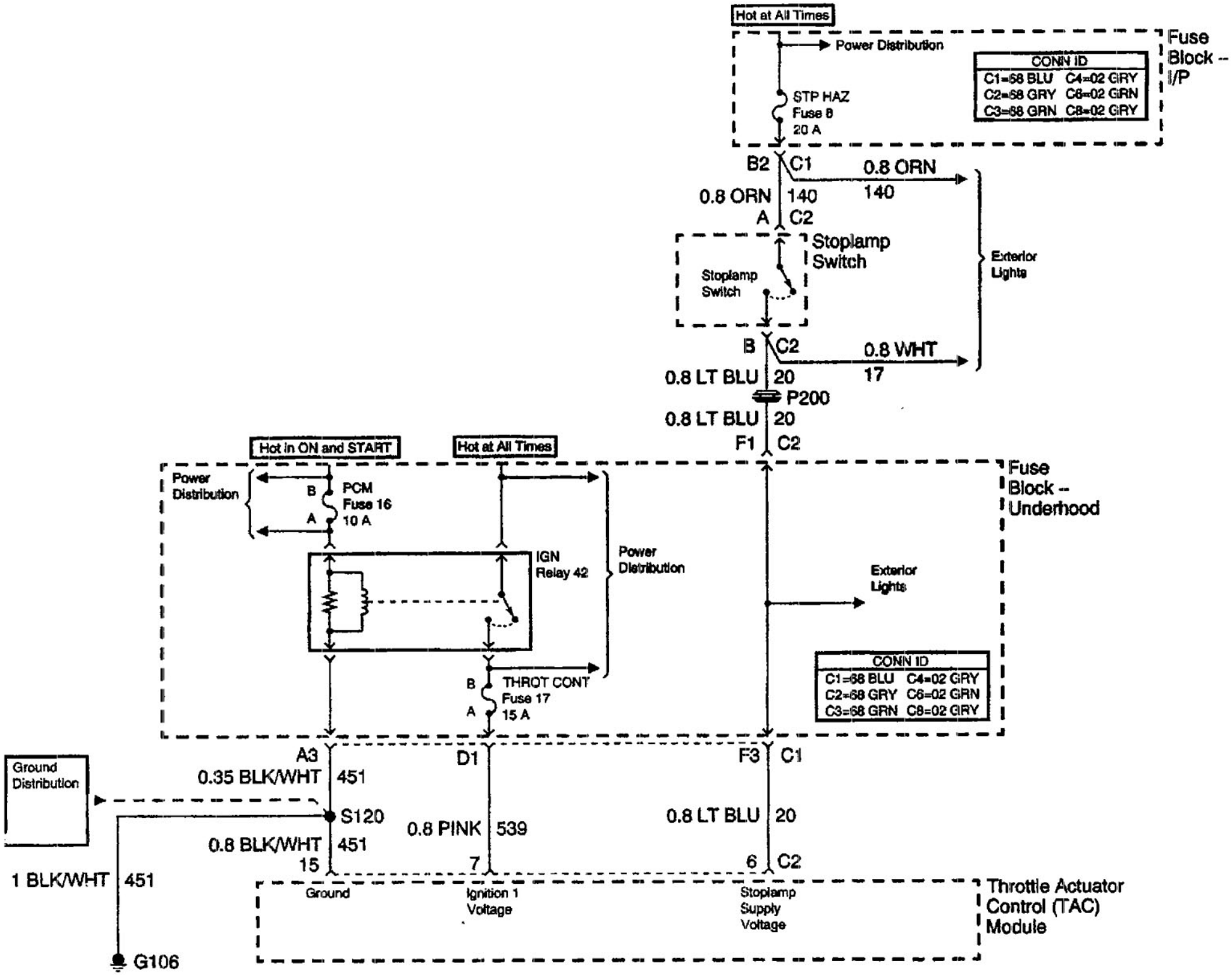
Hot at All Times
Power Distribution
Fuse Block -- I/P
CONN ID
C1=68 BLU C4=02 GRY
C2=68 GRY C6=02 GRN
C3=68 GRN C8=02 GRY
STP HAZ Fuse 8 20 A
B2 C1
0.8 ORN 140
0.8 ORN 140
A C2
Stoplamp Switch
Stoplamp Switch
Exterior Lights
B C2
0.8 WHT 17
0.8 LT BLU 20
P200
0.8 LT BLU 20
F1 C2
Hot in ON and START
Hot at All Times
Power Distribution
B PCM Fuse 16 10 A
A
Fuse Block -- Underhood
IGN Relay 42
Power Distribution
Exterior Lights
B THROT CONT Fuse 17 15 A
A
CONN ID
C1=68 BLU C4=02 GRY
C2=68 GRY C6=02 GRN
C3=68 GRN C8=02 GRY
Ground Distribution
A3 0.35 BLK/WHT 451
D1
F3 C1
S120
0.8 BLK/WHT 451
15
0.8 PINK 539
7
0.8 LT BLU 20
6 C2
1 BLK/WHT 451
Ground
Ignition 1 Voltage
Stoplamp Supply Voltage
Throttle Actuator Control (TAC) Module
G106