Pioneer Navigation Install
in a 2007 Corvette with 1LT Trim Package

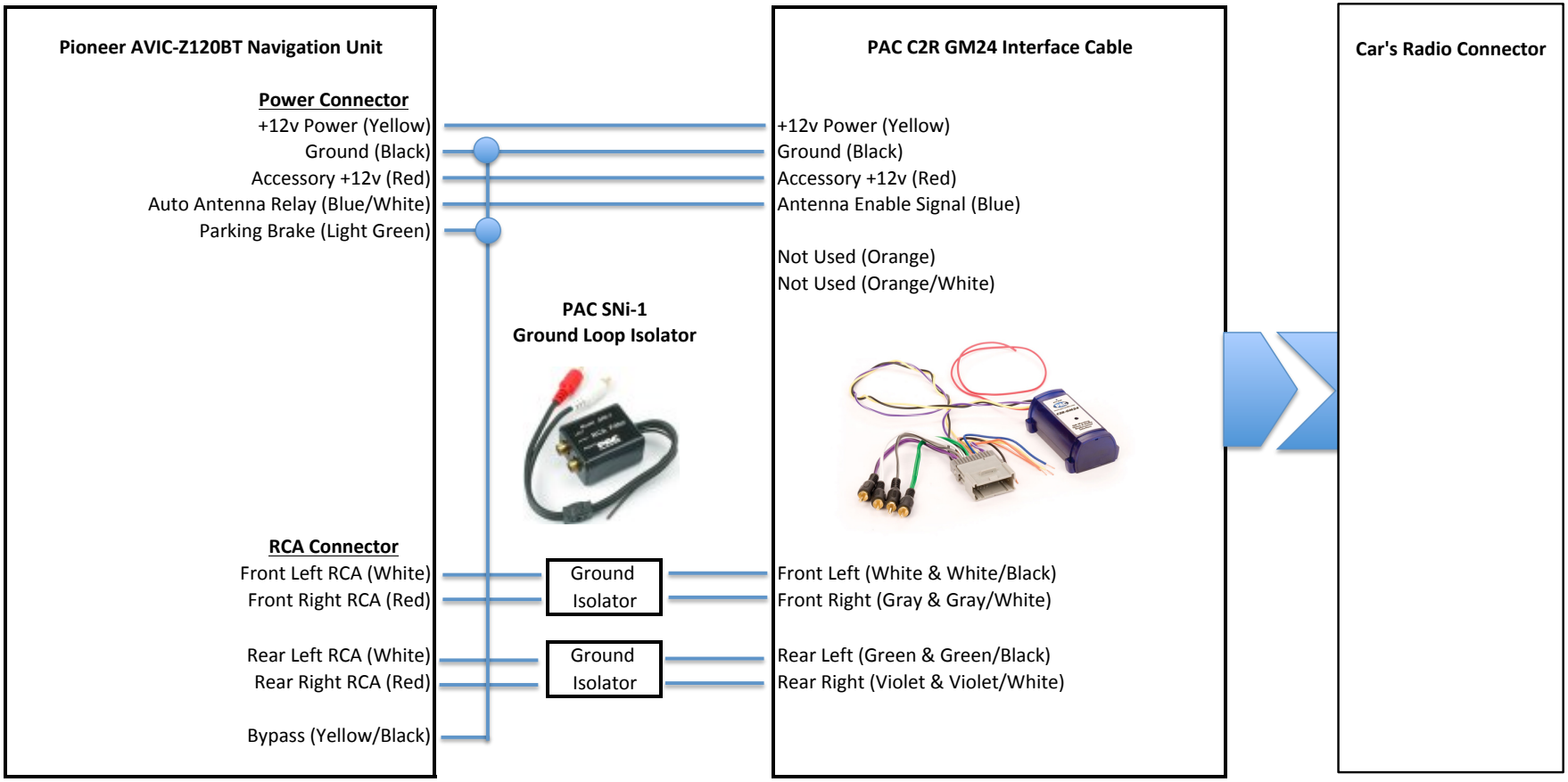

24 Nov 2010