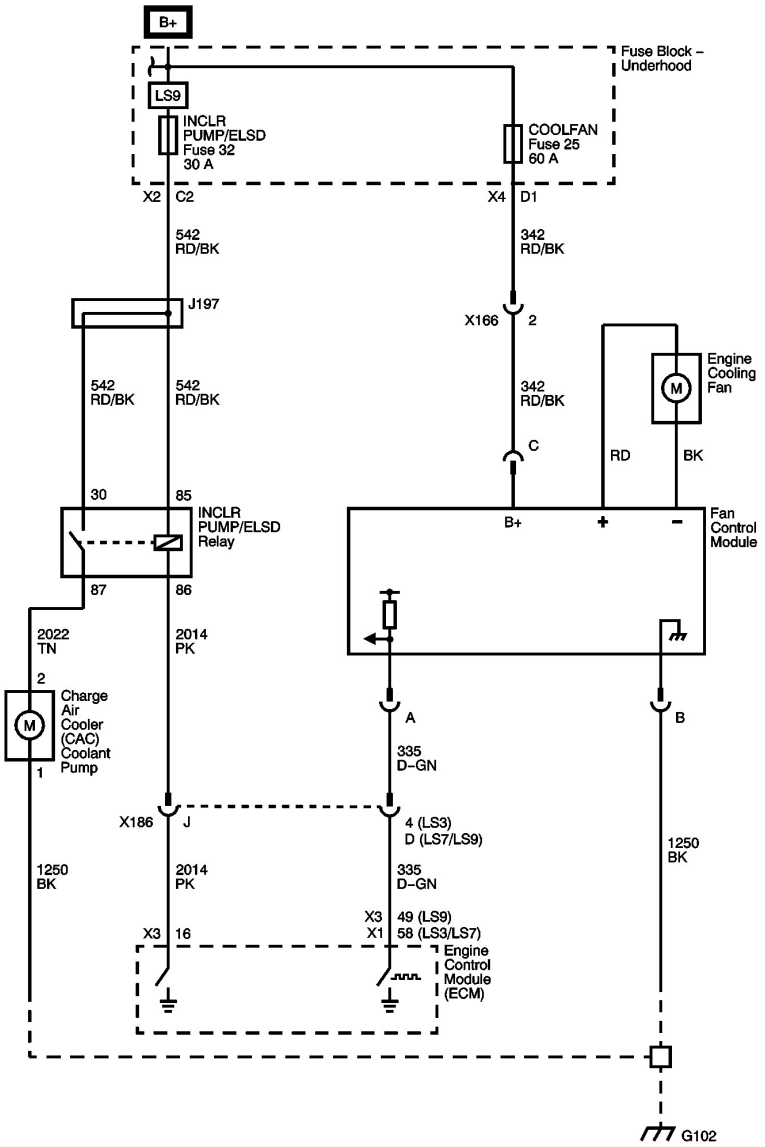
B+
Fuse Block – Underhood
LS9
INCLR PUMP/ELSD Fuse 32 30 A
COOLFAN Fuse 25 60 A
X2 C2
X4 D1
542 RD/BK
342 RD/BK
J197
X166 2
Engine Cooling Fan
542 RD/BK
542 RD/BK
342 RD/BK
C
RD
BK
30
85
INCLR PUMP/ELSD Relay
B+
+
–
Fan Control Module
87
86
2022 TN
2014 PK
2
Charge Air Cooler (CAC) Coolant Pump
1
A
B
335 D–GN
X186 J
4 (LS3) D (LS7/LS9)
1250 BK
2014 PK
335 D–GN
1250 BK
X3 16
X3 X1
49 (LS9) 58 (LS3/LS7)
Engine Control Module (ECM)
G102